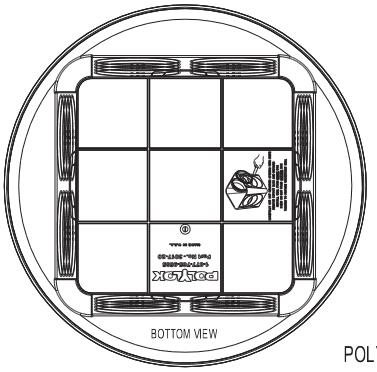

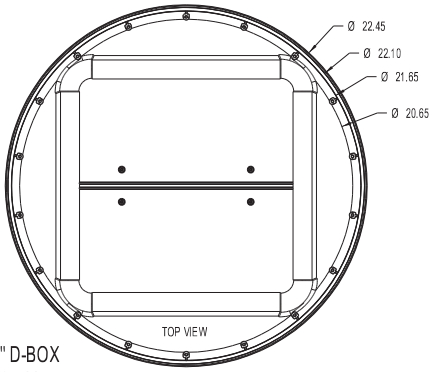

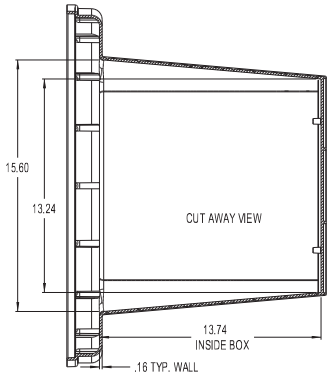

POLYLOK 20" D-BOX
PART NO. 3017-20
MATERIAL - HDPE

BOX ACCEPTS:
LIGHT COVER - PART NO. - 3009C
HEAVY COVER - PART NO.-3017-C20
GRATE- PART NO.-3017-G20

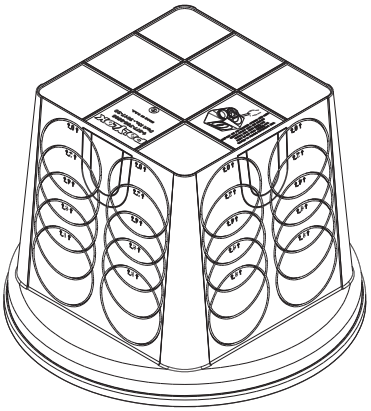

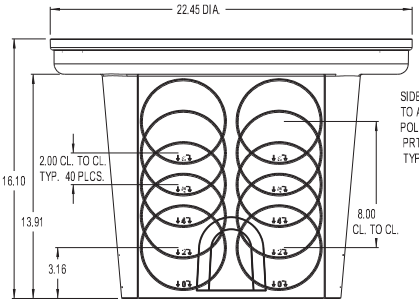
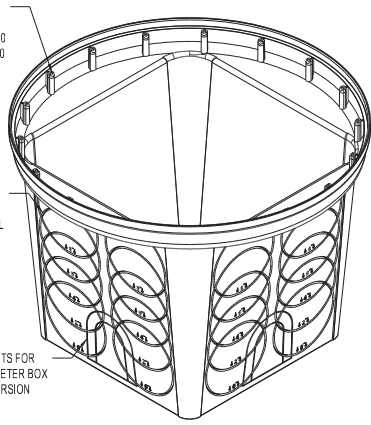
FRONT/SIDE VIEW